Klacci®

life unlocked.

PO Series

ANSI Grade One

Low Energy

Automatic Door Operator

PO

Series

ANSI Grade One

Low Energy

Automatic Door Operator

Designed and Made in Taiwan

Contents

Exterior & Internal Structure 1

Introduction 1

- Controller 3
- Premium Drive Module 5
- Standard Operating Features 7
- Specifications 8

Application 9

- ADA 9
- Overhead Concealed 10
- Fire Door 11
- UWB Hands-Free Access Control (optional) 13
- Locking Hardware Options 15
- App (optional) 17

Accessories 18

- PULL/PUSH Arm Kits 18
- Switches and Sensors (optional) 19

Certification / Compliance 21

How to Order 23

Introduction

The PO Series is an interdisciplinary Mechatronics solution that integrates mechanical engineering, electronics, control engineering, and microcomputer technology. Capable of interfacing with external sensor systems, it features self-learning, self-adjusting, and enhanced anti-pinch capabilities—delivering an AI-powered touchless door operator that is safer, smarter, and more efficient.

The PO Series is built to complying rigorous ANSI / BHMA A156.19 standards, providing an ideal and highly reliable access control solution for retail stores, offices, hotels, educational campuses, data centers, and healthcare facilities.

It also complies with:

- **UL 10C: 3-Hour Fire Safety Rating**
- **UL 228: Power Interruption Closing Force Requirements**
- **UL 325: Electrical Safety & Electromagnetic Compatibility**
- **FCC & CE / RED: Electromagnetic Interference & Radio Spectrum Standards**

PO Series

Modular & Easy Installation

Modular Architecture & Easy Installation

- **Modular, non-handed design for universal left or right-hand setup. The drive unit mounts directly onto the lightweight base plate for easy, one-person installation.**

Cover Options

- **NW Windowless Cover (Standard):**

  Sleek, minimalist design for seamless aesthetic integration.
- **LCD Window Cover (optional):**

  Features a digital display window for easy status checking and parameter adjustment without removing the cover.

Seamless Shaft-Arm Integration

- **Tapered Engagement & Zero Backlash:**

  Tapered fit ensures smooth installation and a rock-solid, zero-backlash connection that prevents play over time.
- **Specialized Tool & Safe Maintenance:**

  Includes a dedicated removal tool for easy, non-destructive detachment without forced impact, ensuring safe and efficient service.

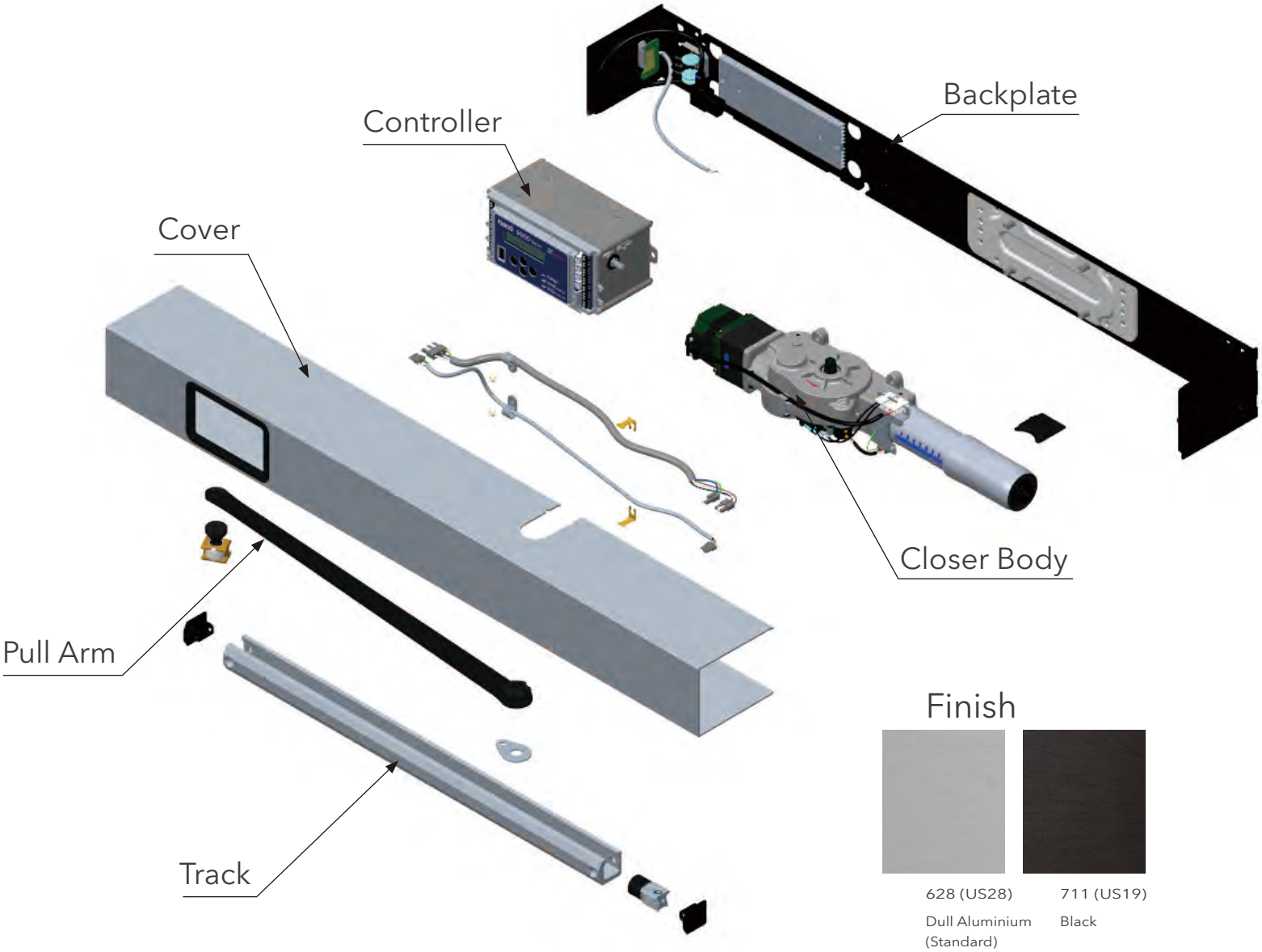

Finish

628 (US28)
Dull Aluminium (Standard)

711 (US19)
Black

PO Series

Controller

Core Driving Technology

- DC Inverter: The controller adopts DC inverter technology, providing more energy-efficient and high-performance power output.
- Intelligent Trajectory Control: The controller can monitor the door panel position at all times and dynamically adjust the torque and braking force according to the opening and closing cycles, ensuring smooth operation.
- Inertia Learn Cycle: During the initial setup, the controller will run test cycles and allow manual adjustments according to the usage scenario, thereby optimizing braking and operating speed while reducing mechanical wear.
- Low Energy Consumption: A 20A power circuit can be used for 8 double-fan automatic door openers, greatly saving energy.

Versatile Operation Modes

The controller has multiple built-in logic modes to meet the requirements of different application environments:

- Air Pressure Management & Compensation:
  - Automatically compensates for wind pressure or building stack pressure, ensuring that the door leaf can still fully close and lock securely even in strong wind conditions.
- Latch Assist:
  - Power-assisted door closing: Applies additional closing force as the door leaf approaches the closed position, ensuring that it fully closes.
- Emergency and Ventilation Management:
  - Ventilation mode: Automatically opens the door leaf upon receiving a fire alarm signal to facilitate smoke exhaust.
  - Emergency mode: In emergency situations, the door leaf can be forcibly kept closed.

Safety & Protection

- Obstruction Control: The controller instantly stops and reverses door motion upon detecting obstacles to prevent injury. Installing the optional door-mounted sensor (P/N NC201) further boosts anti-pinch protection for maximum pedestrian safety.
- UWB - Ultra wideband: Without the need to wave or touch, when a compliant device (mobile phone or tag) is detected within the preset distance, the system will automatically unlock and open the door.
- Power outage memory function: The controller can retain its configuration memory even after power is disconnected, and it can operate normally after power is restored without needing to execute the learning mode again.
- Electromagnetic Susceptibility (EMS): Capable of resisting voltage fluctuations such as electric shock, static electricity, and sudden voltage drops, preventing the controller from being damaged by electromagnetic interference.

The PO series controllers feature a highly intuitive built-in physical operation interface, providing installers with great convenience for real-time configuration and maintenance.

A High-contrast LCD liquid crystal display window quantity

The controller's operation window can clearly display the automatic door opener's current operating status, alarms, or parameter values in real time, making it convenient for technicians to make adjustments and perform troubleshooting.

B Physical cross navigation setting button

Circular physical button design, allowing manual page-by-page adjustment of key parameters such as delay, force, and switching speed without carrying any instruments, is the most efficient and intuitive on-site rapid maintenance solution.

C Status Indicators

Independent status indicator lights, such as POWER, HOME POSITION, and OPEN POSITION, are configured on the right side of the panel, allowing technicians to quickly diagnose the status.

D Firmware update

Standard digital transmission port, dedicated for system upgrade and maintenance, enabling real-time updates of drivers and intelligent trajectory algorithms to maintain optimal performance.

E Control signal input

Equipped with multiple input terminals, integrating gestures, touch switches, access card readers, various sensors, and fire alarm linkage.

F Output controlled by external device

Dedicated control terminals provide power for peripheral sensors, drive electronic locks, and return door status information for remote security monitoring.

G Speed adjustment knob

Equipped with a physical speed adjustment knob, technicians can quickly and directly fine-tune the opening, closing, and cushioning speeds according to the requirements of different door weights.

H Connecting external IoT device

Reserved communication expansion port, supporting connection to IoT modules or UWB chips, enabling seamless access and digital geofencing management through an app.

I Internal Power Supply & Overload Protection

Internal power connector, power switch, and overload protection fuse.

PO Series

Premium Drive Module

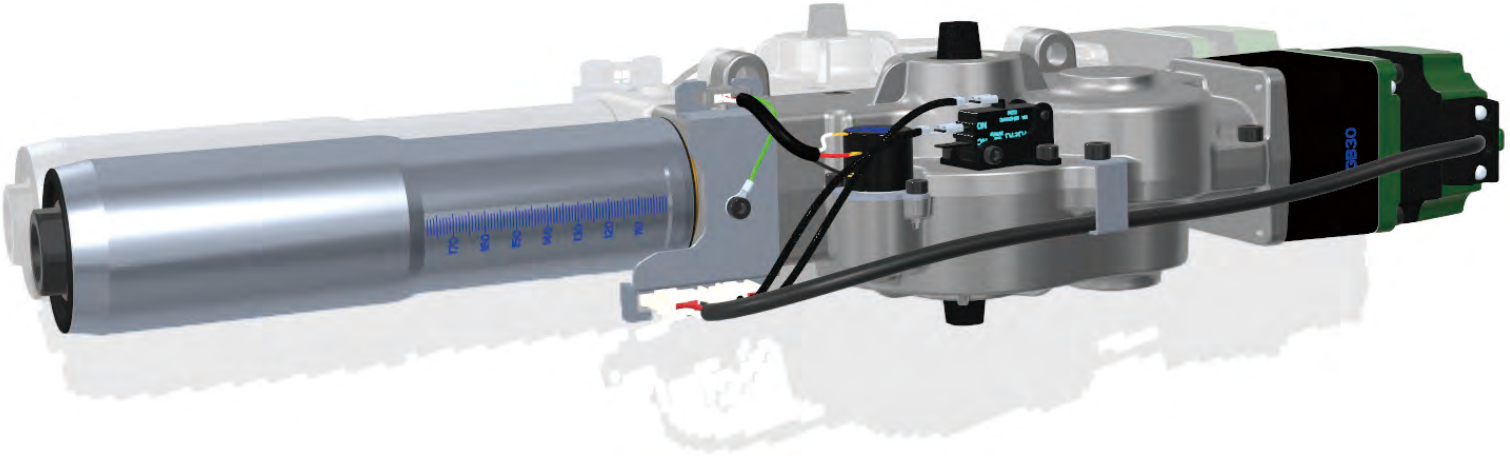

DC Inverter Brushless Motor & Precision Gearbox

At the core of the PO Series Door Operator is a Premium Drive Module, combining a high-efficiency DC inverter brushless motor with a high-precision gearbox. A masterpiece of engineering that balances high power density with a compact footprint, this unit serves as the dynamic power source for the entire door operator system and the physical foundation for all smart operational modes.

Through responsive speed regulation by the inverter brushless motor and complex mesh engagement within the precision gearbox, the system operates smoothly, silently, and with extreme energy efficiency. From Latch Assist (designed to overcome strong building wind loads) to Smart Motion Tracking & Braking (engineered to protect mechanical integrity), this powerful mechanical heart synchronizes seamlessly with the electronic controller. Exceeding the rigorous durability standards of ANSI Grade 1, it quietly and reliably converts raw power into an effortless passage experience.

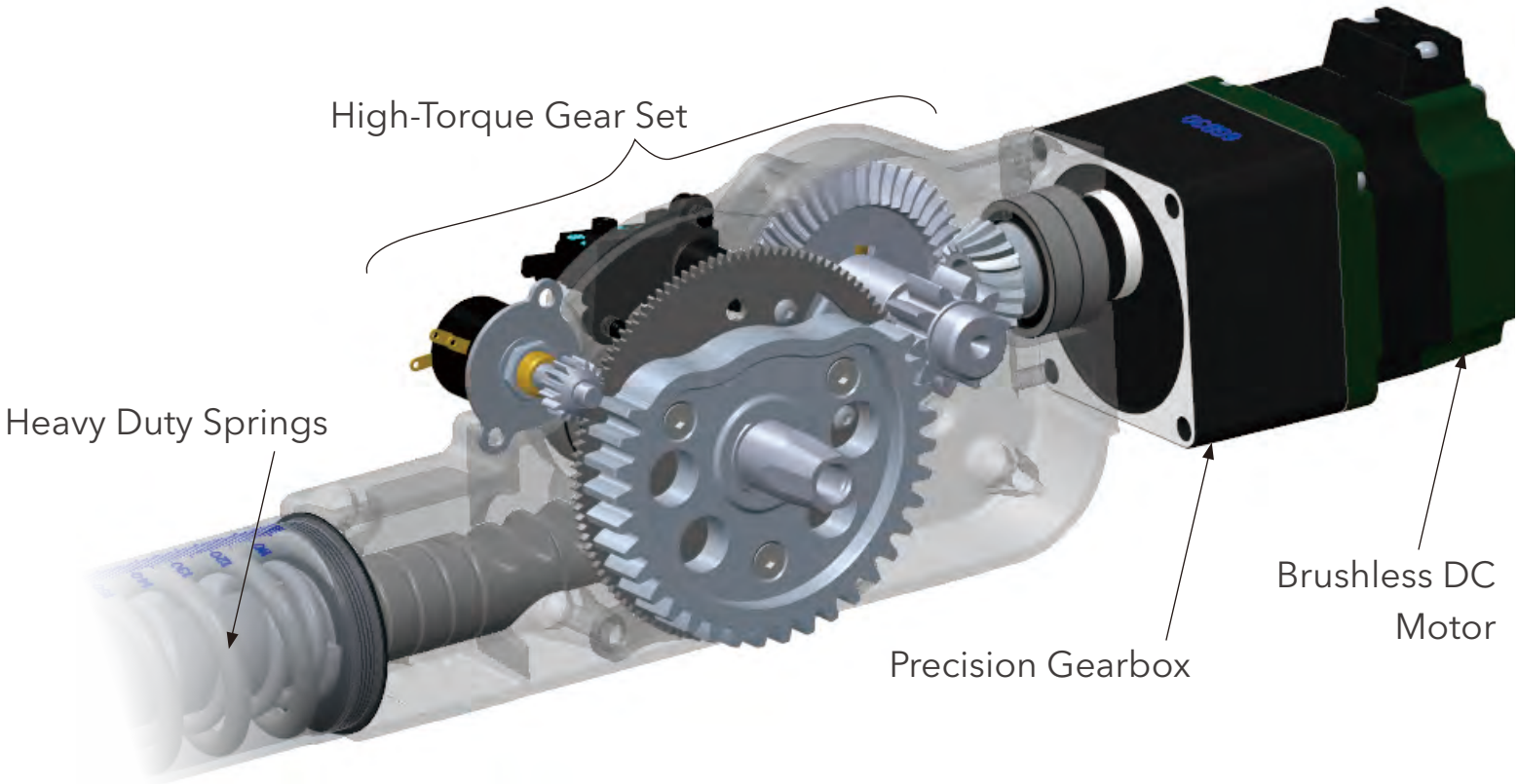

Brushless DC Motor

- High-Efficiency Inverter Drive: The brushless motor dynamically regulates speed and output torque with extreme responsiveness based on trajectory calculations from the controller.
- Lightweight & Heavy-Duty Capability: Despite its compact design, the motor's high power density effortlessly drives doors weighing from 100 lbs to 250 lbs or more.
- Low Energy Consumption & Quiet Operation: The inverter-driven brushless motor significantly reduces energy loss. Compared to traditional AC motors, it operates much quieter while delivering exceptional energy efficiency.

Precision Gearbox

- Compound Gear Transmission: Combines bevel gears and spur gears into a multi-stage reduction system. The bevel gear changes power direction by 90°, allowing the motor to sit parallel to the header and perfectly accommodating low-profile, narrow-frame aesthetics. Multi-stage spur gears ensure precise mesh engagement and torque amplification.
- Physical Foundation for Smart Torque Delivery: Works in close sync with the controller's Smart Motion Tracking and Dynamic Braking. Whether during the buffer phase of opening (Backcheck Position) or overcoming wind resistance at the final latching stage (Latch Assist), the gearbox withstands high-impact forces while delivering steady power.
- Wear Resistance & High Precision: Precision-machined and hardened gears guarantee zero binding and low backlash during continuous long-term operation—forming the core mechanism that meets ANSI Grade 1 endurance standards.

Modular Advantages

- Simplified Installation: The brushless motor, gearbox, and heavy-duty return springs are fully interconnected. Featuring an integrated Modular Design, installer technicians can secure the entire assembly directly onto the mounting base without requiring complex field adjustments, ensuring fast and straightforward installation.

PO Series

Standard Operating Features

Safety & Emergency

Emergency Relay

- Force override all existing trigger commands and keep the door leaf closed until the emergency signal stops.

Ventilation Mode

- When the alarm system is triggered, the door will automatically open to allow air circulation or smoke exhaust until the signal stops.

Obstruction Control

- Instantly stops and reverses door motion upon detecting obstacles to prevent injury. Optional door-mounted sensor (P/N. NC201) enhances anti-pinch capabilities for maximum pedestrian safety.

Mechanical Assist

Latch Assist Mode

- When the door opener is in the closed position, provide additional pulling force to assist the door lock latch in smoothly engaging.

Power Close Mode

- The activation angle of the assisted closing force can be set between 10° and 0°.

Push & Go Mode

- When a manual door push of 5° is detected, the door opener will automatically drive the door leaf to the fully open position.

Door Closer Mode

- When the power is turned off, it can be used as a regular door closer.

Access Control

Hold Open

- Open and keep the door in the fully open position. A preset duration can be configured, or it can remain open continuously until the status is cleared.

Vestibule Delay Mode

- The first door and the second door open in sequence. The second door will open after a delay, and the delay time can be adjusted.

Disable Push Button

- After activation, the door-opening button on the outdoor side will become disabled.

System Logic

Mode Selector

- OFF (Power Off): Stops operator actions and locks keys/display while maintaining continuous 24 VDC output.
- ON (Power On): Allow the door opener to execute routine operation procedures, keep the screen illuminated, and have the buttons locked by default.
- M/P (Modification Mode): The door opener is functioning normally, and system parameters can be configured through the panel buttons.
- H/O (HOLD OPEN Mode): Automatically open the door panel and secure it in the fully open position. At this time, the screen lights up and the buttons remain locked.

Motion Delay

- When the door lock hardware requires an unlocking time, the delay time for door leaf opening can be set.

Specifications

Operating Conditions

Working Temperature	• 5~122°F (-15~50°C)
Only suitable for dry environments	• Relative humidity max. 93% (non-condensing)
Building Power Supply	• 15A • 14 AWG (2.0mm²)
Power Source	• 100~125 / 200~240VAC 50/60Hz • Single Door (MAX 1A) / Pair Doors (MAX 2A)
Connections for Power	• 18 AWG (0.824mm²)
Steady State Power Consumption (MAX)	• Single Door (40w) / Pair Doors (80w)
Class of Protection	• Cover IP20 • Controller IP30
Operating Noise (MAX)	• 50 db (A)

General Specifications

Dimensions (W × H × D) (Single Door)	• (34-1/4"~49-3/4") × 3-3/4" × 4-3/4" (870mm ~ 1264mm) × 95.45mm × 120.9mm
Dimensions (W × H × D) (Pair Doors)	• (73-3/4"~97-3/4") × 3-3/4" × 4-3/4" (1873mm ~ 2483mm) × 95.45mm × 120.9mm
Door-Leaf Width (Single Door)	• 32-1/8"~48" (800mm~1219mm)
Door-Leaf Width (Pair Doors)	• 72" or 96" (1829mm or 2438mm)
Door Frame Size (MIN)	• 2" (50.8mm)
Clearance Between Top of Door and Ceiling (MIN)	• 6" (152.4mm)
Operator Weight	• Single Door: 31.9 lb (14.5 kg) • Pair Doors: 63.8 lb (29 kg)
Opening Angle (MAX)	• 110°
Door Weight (MAX)	• PULL size 4: 150 lb (68 kg) for UL228 • PUSH size 5: 200 lb (90 kg) for UL228

Inputs

Connections for Signal	• 22 AWG (0.33mm²) (MAX)
Open activation	• NO contact
Open Delay	• Dual-Door Sequential Control with Vestibule Delay
HOLD OPEN	• NC contact
Outside Bottom Disabled	• NC contact
Emergency	• NC contact
Blow Open	• NC contact
Obstruct Closing	• Pull side and push side (NO contact)
Obstruct Opening	• Pull side and push side (NO contact)

Outputs

Connections for Signal (MAX)	• 22 AWG (0.33mm²)
Power Supply For External Accessories (MAX)	• 24VDC, 0.5A
24VDC output	• GND - Single Momentary Contact (Trigger)
Dry Contact	• COM - NO (Normally Open Contact) / NC (Normally Closed Contact)

Integrated Functions

LED Status Indicator	• POWER - Power Indicator • HOME - Closed Position Indicator • OPEN - Open Position Indicator
LCD Display Program Panel	• Dual-line digital display control
Mode Switch	• OFF: Power Off • ON: Power On • M/P: Modification Mode • H/O: HOLD OPEN Mode
Motion Delay For Locking Mechanism (electric strike)	• 0~5 second/s
Opening Speed	• 18° /second
Push & Go Mode	• The door opens when it is moved manually by 5°
Opening Obstacle Detection	• Return to 0° (Home Position) after obstacle stop
HOLD OPEN Time	• 5~30 seconds
Closing Speed	• 18° /second
Latch Assist Mode	• Power-assisted door closing (Activate/ Deactivate)
Powered Close	• Configurable: 5° to 10°
Obstruction detection during closing cycle	• Post-Obstacle Home Reset (90°) (If the opening cycle fails to complete after 3 consecutive attempts, the system will trigger an alarm.)
24 VDC Re-output	• Re-disengages the locking device at 20° before full closure.
Power Failure Speed Control	• Manual speed adjustment (UL 228 Compliant: 4–6 s)
OBS DET SEN	• Obstacle Detection Sensitivity Adjustment
Audible Beep	• Keypad silent mode (ON/OFF)

State

Cycle Counter	• Usage Record
Door Open Time	• Current Opening Time (s)
HOLD OPEN Time	• Current HOLD OPEN Time (s)
Door Close Time	• Current Closing Time (s)
IPM Overtemperature Protection	• Motor shuts down when IPM temperature exceeds 100°C; automatically resumes operation after cooling down to 65°C (Thermal Hysteresis Protection).
Restore Factory Defaults	• YES

PO Series

Application - ADA

A fully ADA-compliant accessible entrance solution

Designed specifically for high-traffic entrances and exits, the PO Series can easily upgrade existing building entrances into hands-free, energy-efficient automatic door control systems. It not only greatly enhances accessibility and convenience but also effectively reduces the risk of contact-based infection transmission, while fully meeting ADA accessibility requirements.

* Note: All fire rated doors should have the minimum opening force allowable by the appropriate administrative authority, typically the local Fire Marshal. Closing and latching a fire door takes precedence over ADA opening force limits.

Application - Overhead Concealed

Automatic door solutions with concealed door openers

Hidden design is the ideal choice for modern architecture and historic monument restoration. We conceal the powerful drive unit inside the top of the door frame, allowing the convenience of an automatic door to coexist with your design aesthetics, eliminating the impact of external equipment on the beauty of the lines.

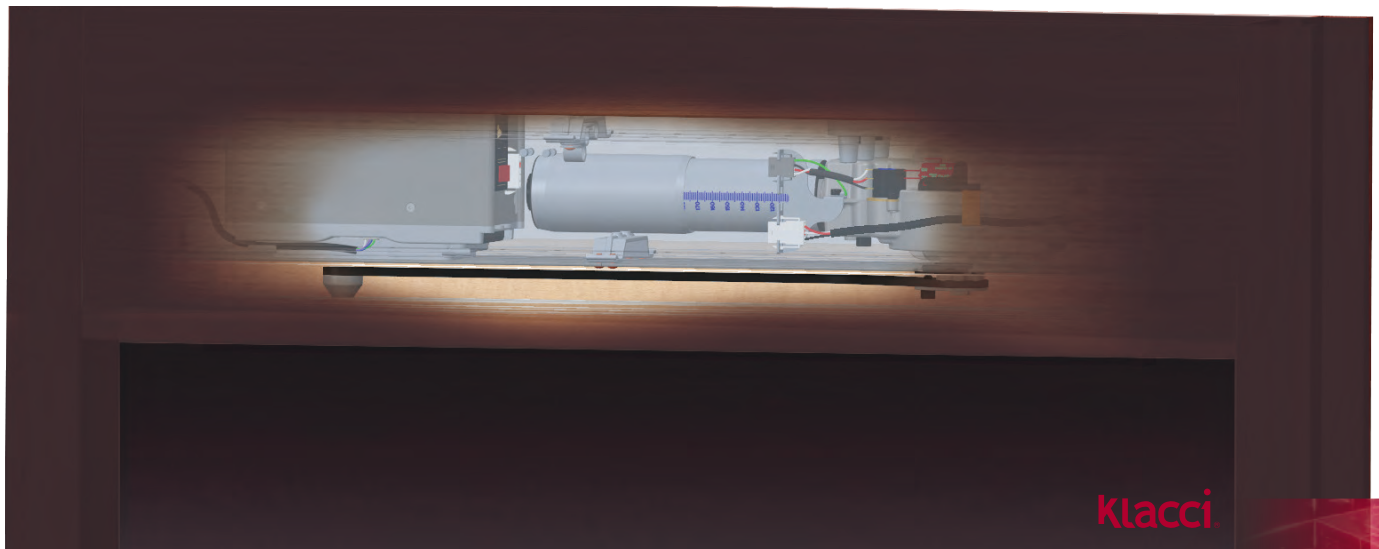

PO Series

Application- Fire Door

Normally allowing elegant passage; absolutely isolated during disasters.

The PO series has passed the UL 10C 3-hour fire safety certification and complies with NFPA fire regulations (Life Safety Code) requirements. It can be integrated with fire alarm systems to automatically open the door leaf for smoke ventilation when smoke is detected, or to forcibly lock and close the door leaf during emergency situations to ensure safety.

The combination of the PO series and fire doors achieves a high standard of "seamless passage during normal times, absolute isolation during emergencies." Through the precise coordination of smart controllers, the automatic door operator serves as a user-friendly accessibility assistant in daily life, while instantly transforming into the most reliable fire-rated closing barrier the moment a fire signal is received.

Automatic reset after power failure: Door Closer Mode

- Normally powered by electricity: During daily operation, the motor and gearbox overcome the resistance of the built-in high-strength spring, providing smooth automatic opening/closing or power-assisted access (Power Assist).
- Fail-Safe: The core principle of a fire door is that "it must remain closed during a fire to prevent the spread of smoke and flames." When a fire causes a building power outage, the controller will immediately release the motor-driven magnetic force. At this point, the automatic door operator will automatically switch to a purely mechanical door closer mode, using the built-in return spring to ensure that the fire door is properly closed and locked, complying with fire safety regulations.

Ventilation Mode

- Alarm-linked smoke exhaust: The controller can be integrated with the building's fire alarm central system (Alarm System). When a fire alarm is triggered and the fire control command determines that smoke extraction is required in a specific area, the automatic door opener will activate the ventilation mode, automatically keeping the door leaf in the fully open position to accelerate air or smoke movement until the fire alarm signal is cleared.

Emergency Relay

- Force shutdown block: In certain fire safety scenarios (for example, when fire spread has already been detected on both sides of a fire compartment), the fire protection system will send the highest-priority signal to the automatic door opener. At this time, the controller's emergency override mode will immediately override all external sensors (including infrared, UWB, etc.), forcing the door leaf to close and lock, preventing the spread of fire and toxic smoke outward and protecting the safety of evacuation routes.

Stack Pressure Compensation

- Ensure a tight fit: Fire doors are usually equipped with denser fire-resistant sealing strips, and during a fire, strong airflow often occurs between the interior and exterior due to temperature differences (the chimney effect/inter-floor pressure).
- Latch bolt and power assist: The automatic door opener features floor-to-floor pressure compensation and a latch assist mode. During the final stage before the door leaf closes, it automatically increases the motor torque to ensure that the door leaf can fully overcome the resistance of the sealing strip and wind pressure, allowing the fire-rated electric lock to engage securely.

ANSI Grade 1 and fire rating certification

- High-frequency endurance test: Fire doors are typically extremely heavy. The PO series complies with the ANSI Grade 1 durability standard, and its high-precision gearbox and variable-frequency motor can support the operation of heavy door leaves at high frequencies, preventing fire doors from becoming unable to close at critical moments due to deformation caused by long-term load-bearing.

AUTOMATIC
CAUTION
DOOR
Klacci
FIRE
EXIT
FIRE DOOR
KEEP CLOSED
FIRE-RESISTANT
DOOR

PO Series

Application - UWB Hands-Free Access Control (optional)

Integration of multi-sensing and UWB* technologies

The PO series integrates a variety of sensing and expansion devices, enabling traditional doors to be upgraded into advanced automated entrances. In addition to supporting conventional motion sensing, thermal sensing, and infrared detection to trigger opening, the integration of UWB (Ultra-Wideband) technology further elevates the access experience to the level of "seamless hands-free passage."

UWB features

Centimeter-Level Precision

Accurately distinguishes between approaching users and passersby, pre-activating the door for seamless access.

Dynamic trajectory tracking

The controller integrates UWB data with Intelligent Trajectory Control, adjusting the opening curve based on walking speed to provide the smoothest rhythm.

High-security ranging

Using Time-of-Flight (ToF) ranging technology, it effectively prevents relay attacks and can identify identities to enable access control management for specific time periods.

Hands-Free Experience

Without the need to wave or touch, when a compliant device (mobile phone or tag) is detected within the preset distance, the system will automatically unlock and open the door.

System integration and energy saving

Through the App interface, users can intuitively define sensing boundaries, and UWB's low-power characteristics perfectly align with Klacci's DC inverter energy-saving philosophy.

* When using a smartphone for UWB seamless passage, the device must support UWB (Ultra Wideband) functionality.

AUTOMATIC
CAUTION
DOOR
UWB

PO Series

Application - Locking Hardware Options

The PO series can be equipped with various Klacci mechanical or electronic door lock devices to enhance access control security, such as emergency escape door locks with motorized latch retraction, the iF^{+} electronic lock series, or electric strikes paired with various Klacci mechanical door locks.

iF^{+}R Series

Keyless Lock

iF^{+}94 Series

Mechanical / Electrical

Mortise Lock

LF Series

Mechanical / Electrical

Cylindrical Lock

1000 / 2000 / 30 Series

Motorized Exit Device

MG Series
Magnetic Lock

ES100 Series
Electric Strikes

ES200 Series
Electric Strikes

EPT Series
Power Transfer

PO Series

Application - App (optional)

One of the core advantages of the PO Series automatic door opener system is its ability to transform complex mechanical adjustments into intuitive digital operations. Through its dedicated mobile app, administrators, installers, and maintenance personnel no longer need to remove the housing to perform cumbersome hardware adjustments. Instead, they can complete all key settings directly through the smartphone interface.

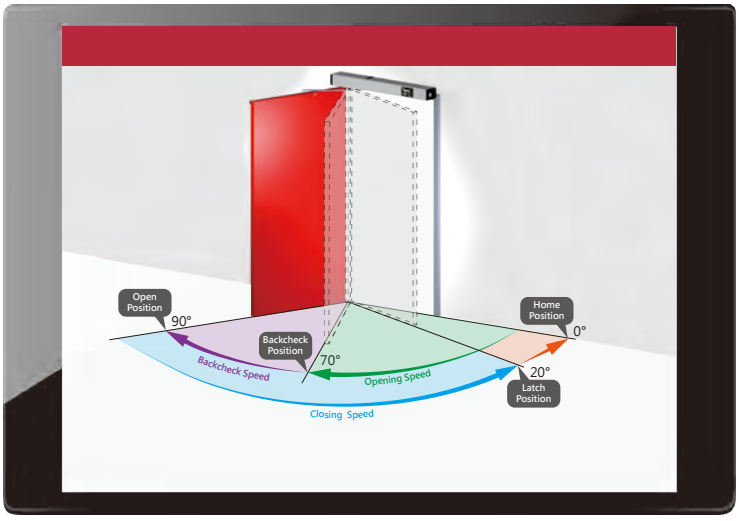

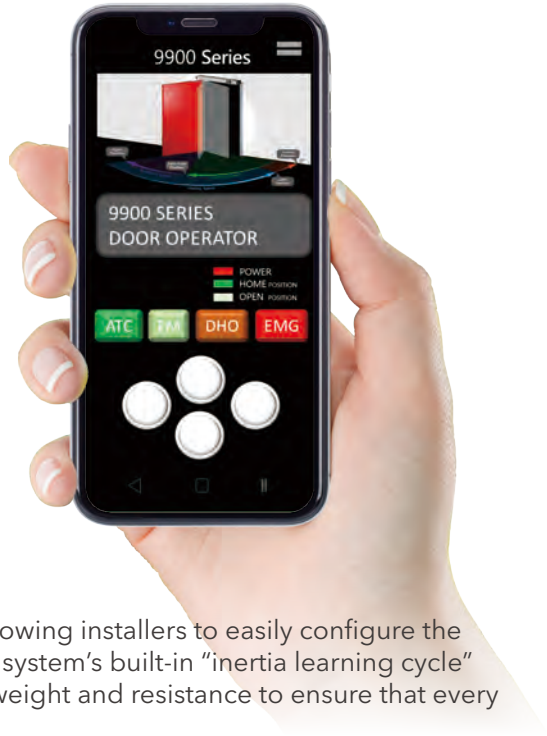

Intuitive digital installation and calibration

- The App provides an extremely user-friendly graphical interface, allowing installers to easily configure the door opening position, backcheck position, and latch position. The system's built-in "inertia learning cycle" also synchronizes with the App, automatically measuring the door weight and resistance to ensure that every opening and closing operation achieves the optimal balance.

Personalized access parameter adjustment

- Administrators can adjust the opening and closing speeds of the door leaf at any time through the App according to the needs of the site. Whether it is to extend the opening time for the elderly and people with limited mobility, or to speed up the closing process to prevent air conditioning from escaping, all settings can be completed in an instant. In addition, the "power assistance" strength for heavy door leaves can also be fine-tuned through the App, providing the lightest and most effortless manual door-pushing experience.

Real-time diagnostics and status monitoring

- The app is equipped with powerful diagnostic features that can display the operating status of the automatic door opener in real time, including power status, obstacle detection records, and maintenance reminders. This not only improves management efficiency but also extends the equipment's service life through preventive maintenance.

UWB contactless access smart hub

- After the system introduces UWB* (Ultra-Wideband) technology, the App becomes the tool for defining the "digital fence." Administrators can precisely set the sensing range within the App (for example, activating it when someone is 1.5 meters in front of the door), ensuring that the automatic door opener will only automatically unlock and open when a user carrying a compliant mobile device is truly nearby. This precise spatial awareness completely solves the problem of traditional proximity-sensing doors being easily triggered accidentally by passing pedestrians.

* When using a smartphone for UWB seamless passage, the device must support UWB (Ultra Wideband) functionality.

Accessories - PULL/PUSH Arm Kits

Featuring a precision tapered design, the arm assembly connects smoothly to the drive shaft for a rock-solid, zero-backlash fit that never loosens. Included specialized removal tools allow fast, damage-free detachment without forceful hammering.

PULL Arm & Track

Used when the automatic door opener is installed on the same side as the door leaf opening direction (Pull side). The track includes limit stoppers to prevent the door leaf from opening beyond 90° or a preset opening angle. Its track design provides a sleek appearance, making it ideal for indoor aesthetic requirements.

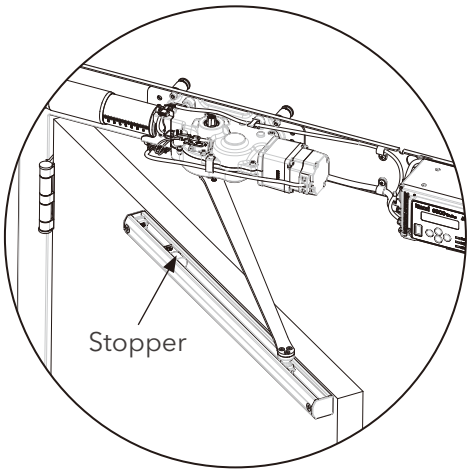

P/N. ARM10 (Included Standard)

PUSH Arm

Used when the automatic door opener is installed on the opposite side of the door leaf's opening direction (push side). This configuration usually provides greater power output and is suitable for environments where wind pressure needs to be overcome.

P/N. ARM20 (Included Standard)

Customized PUSH Arm

Suitable for installation on the push side of the door, where the **door stop** height on the door frame is greater than 1/2" (13 mm) to 2" (50 mm).

P/N. ARM30

PO Series

Accessories - Switches and Sensors (optional)

All accessories must be purchased separately. Please contact the company to confirm availability.

Contact

P/N. C100
Button

P/N. C101
Push to button

Touchless

P/N. NC100
Wave-to-Open Sensor (Horizontal)

P/N. NC101
Wave-to-Open Sensor (Vertical)

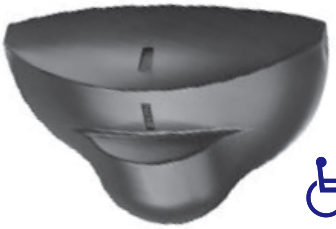

P/N. NC200
Header Mounted Sensor

P/N. NC201
Door Mounted Sensor

P/N. UWB10
UWB (Ultra-wideband)

P/N. iF+R
BLE Reader

Klacci
AUTOMATIC
CAUTION
DOOR
AUTOMATIC
CAUTION
DOOR

PO Series

Certification / Compliance

Renowned worldwide, I-TEK's registered brand Klacci provides top-tier access control and lock products for commercial and residential markets, including a wide range of mechanical, electronic, and biometric lock solutions to meet the needs of modern lifestyles.

Klacci's pursuit of excellence and innovative design is driven by I-TEK's sixty years of manufacturing expertise and customer needs. All Klacci product lines are entirely designed and manufactured in Taiwan by I-TEK.

This product complies with or has passed the following UL / ITS / SGS tests and certifications, and is maintained through subsequent follow-up service programs to ensure continued compliance with access control security standards.

UL certification

UL CCN : GUJY
Fire Door Operators with Automatic Closers

UL10C

Standard Positive Pressure Fire
Fire rated, 3 hr

UL228

Door Closers-Holders

UL325

Door, Drapery, Gate, Louver, and Window Operators and Systems
ANSI/CAN/UL 325/991

ITS certification

ANSI A156.19

Power Assist and Low Energy Power Operated Doors.
ANSI A156.19 Grade 1

SGS certification

FCC

Federal Communications Commission
FCC 47 CFR Part 15 Subpart B, Clauses 15.107, 15.109 ANSI C63.4: 2014 AMEN

ISED

Innovation, Science and Economic Development Canada
ISED ICES-003 Issue 7 (October 2020), Clauses 3.2.1, 3.2.2

Regulation

ADA

Americans with Disabilities Act

NFPA

National Fire Protection Association

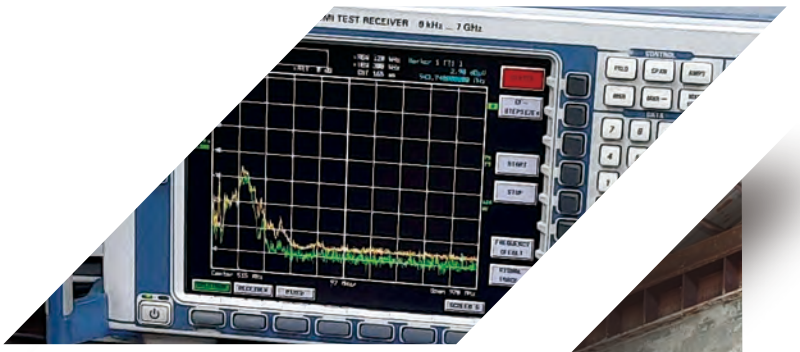

(Conducted Emission) – CE

FCC (Radiated Emission) – RE

PO Series

How to Order

Model Overview Table

			Illustration	Model	Housing Length	Door Opening
Single Door	PULL			9931	34-1/4" (870mm)	32-1/8" (800mm)
				9930	37-3/4" (959mm)	36"~48" (914mm~1219mm)
				9934	49-3/4" (1264mm)	48" (1219mm)
	PUSH			9941	34-1/4" (870mm)	32-1/8" (800mm)
				9940	37-3/4" (959mm)	36"~48" (914mm~1219mm)
				9944	49-3/4" (1264mm)	48" (1219mm)
		Overhead Concealed		9980	30-3/8" (770mm)	36"~48" (914mm~1219mm)
Pair Door	PULL			9956	73-3/4" (1873mm)	72" (1829mm)
				9958	94-3/4" (2483mm)	96" (2438mm)
	PUSH			9966	73-3/4" (1873mm)	72" (1829mm)
				9968	94-3/4" (2483mm)	96" (2438mm)
		Overhead Concealed		9986	70-3/4" (1797.05mm)	72" (1829mm)
				9988	94-3/4" (2406.65mm)	96" (2438mm)

Plug Type

PL120 100~120 VAC (NEMA 5-15P)(Standard)

PL240 200~240 VAC (NEMA 6-20P)

Cover Options

NW Windowless (Standard)

(Blank) Window

The standard PO series models feature a cover without a window, and are also available with a cover designed with an LCD viewing window to meet diverse design requirements.

Ordering Example:

1. 9930-NW-628-PL120 (Model-Windowless-Color-Plug Type)
2. 9940-628-PL240 (Model-Window-Color-Plug Type)

Device	Ordering Example			
	Model	**Cover**	**Color**	**Plug Type**
	9930	**- NW**	**- 628**	**- PL120**
	9940		**- 628**	**- PL240**

Model Options (Refer to Model Overview Table)

Cover Options

NW Windowless (Standard)
(Blank) Window

Finish (see page 2)

628 US28 Dull Aluminium (Standard)
711 US19 Black

Plug Type Options

PL120 100~120 VAC (NEMA 5-15P) (Standard)
PL240 200~240 VAC (NEMA 6-20P)

Warranty

Klacci ("Company") warrants to the original purchaser ("Purchaser") that the products manufactured and provided under the Klacci® brand shall be free of defects in material and workmanship under normal use and service as follows: (a) mechanical locks for 5 years; (b) electrified products for 1 year, and (c) finishes for 1 year. The Purchaser shall be obligated to store, transport, install, maintain and operate the products in accordance with good practice and reasonable maintainence works, and has followed specific instructions from the Company. Furthermore, the cost incurred in removing and installing a replacement product is not included in the warranty. Upon return of a defective product, Klacci may repair or replace the product.

The present warranty does not cover:

1. Scratches, abrasions, deterioration due to the use of paints, solvents and other chemicals.
2. Normal wear and tear.
3. Lack of proper maintenance.
4. Abuse or any damage caused by improper installation, sabotage or misuse of the product.
5. Improper storage, shipping and handling.
6. Failure to follow instructions or guidelines provided by the Company.

Klacci makes no representations or warranties concerning any modification or installation along with other brand products that can potentially impact its intended operation or cause malfunction. When retrofitting any portion of an existing fire rated opening, or specifying and installing a new fire-rated opening, please follow its installation instructions accordingly or consult with a code specialist or local code official (authority having jurisdiction) to ensure compliance with all applicable codes and ratings.

Note:

- The warranty becomes effective from the date of shipment.

Contents in this catalog are for reference and illustration only. Shipments subject to actual productions. Please consult factory for final discretion.

These products and systems are under patent protection, counterfeiting not allowed.

Klacci®
life unlocked.

www.klacci.com

Headquarters and Operation Office

I-TEK Metal Manufacturing Co., Ltd.

18 Gungye 3rd Road, Annan,
Tainan 70955, Taiwan.

T 886 6 3840722

F 886 6 3840715

E sd.klacci@gmail.com
sd@klacci.com
sd@iteklock.com.tw

Global Office

KLACCI Inc.

California, USA

Nevada, USA

T +1 (720) 675-5677

E sd@klacci.com
sd.klacci@gmail.com

This product is covered by one or more patents.
Copyright© 2026 I-TEK Metal Manufacturing. All rights reserved.
Subject to change without notice. 202609(A60a1B4-02-01-05)